GALATEA

since 1880

INSTRUCTION SHEET

for

shower trays

CONTENT

GENERAL	Page 3
VISUAL INSPECTION	Page 4
INSTALLATION INSTRUCTION	
Installation of shower trays with feet	Page 4 - 6
INSTALLATION OF THE SOUND INSULATION TAPE	Page 7
MOUNT THE BATHTUBS ARMATURE POINTS OR -BARS	
Armature installation	Page 7 - 9
Rail Installation	Page 10 - 13
INSTALLATION OF DRAIN AND OVERFLOW	Page 14 – 19
CARE INSTRUCTION	Page 20
WARRANTY	Page 20
SERVICE	Page 20

GENERAL

The following table shows the minimum requirements for the Bath.

Facilities	Apartments for 1 to 2 people			Apartments for 2 to 4 people			Apartments for 5 or more people			
	Minimum Equipment	Recommended Equipment		Minimum Equipment	Recommended Equipment		Minimum Equipment		Recommended Equipment	
	Bath	Bath	WC	Bath	Bath	WC	Bath	WC	Bath	WC
washstand	X	X		X	X[5]	X	X	X	X[5]	X
bathtub	X[1]	X[1]		X	X		X		X	
shower tray					X	X[6]	X		X	X[6]
bidet		X			X		X		X	
water closet	X	X	X[2]	X	X	X	X	X	X	X
washbasin			X			X[3]		X[3]		
space for washing mashine and spin dryer	X	X		X[4]	X[4]	X[7]	X[4]		X[4]	X[7]
space for drying equipment		X			X[4]	X[7]			X[4]	X[7]
space for bathroom furniture		X			X				X	X

1) optional shower tray
2) instead of a flush toilet in the bath
3) unless provided a washstand
4) unless in the laundry room
5) instead of a washstand b=60 cm choice of washstand as needed up to b=100 cm or a double washstand
6) optional instead of shower tray in the bath
7) as an alternative to floor space in the bath

Ill. 1
source: German institute for standardization, standards for sanitary planning (2010).

On the following survey you can see certain minimum distances.

	wash-stand	counter-top basin	wash-basin	bidet	shower tray, bathtub	closet and urinal	washing machine	bath room furniture	walls
wash-stand	20	–	–	25	20[1]	20	20 ≥ 20[a]	5	20
counter-top basin	–	0	–	25	15[1]	20	15	0	0
wash-basin	–	–	–	25	20	20	20	20 ≥ 25[a]	20 ≥ 25[b]
bidet	25	25	25	–	25	25	25	25	25
shower tray, bathtub	20[1]	15[1]	20	25	0[2]	20	0	0	0
closet and urinal	20 ≥ 15[c]	20	20 ≥ 15[c]	20	20	20[3] ≥ 15[c]	20	20 ≥ 15[d]	20 25[4]
washing machine	20	15	20	25	0	20 ≥ 15[c]	0	0	3
bathroom furniture	5	0	20	25	0	20	0	0	3
walls	20	0 ≥ 25[a]	20	25	0 ≥ 25[b]	20	3	3	–

1)The distance can be reduced to 0 (if no shower separation available, for shower trays it should be generally assumed, that a fix shower enclosure is made)
2) distance between bathtub and shower tray; for the arrangement of the supply valves in the separating wall between the tubs 15 cm are required
3) distance between toilet bowl and urinal
4) for walls on both sides
a) for high cabinets
b) for walls
c) lateral distance from the flush toilet
d) wall on one side

Ill. 2
source: German institute for standardization, standards for sanitary planning (2010).

VISUAL INSPECTION

Please remove the protector BEFORE the installation. Check your new acquisition BEFORE installation for possible damages under the protector. After installation, we can ONLY give warranty on manufacturing defects.

INSTALLATION INSTRUCTION

Installation of **shower trays** with **feet** (Example. 4-Point-Feet)

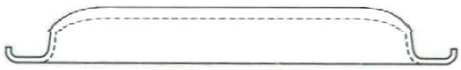

1) Turn the product upside down, so the bottom shows towards the ceiling:

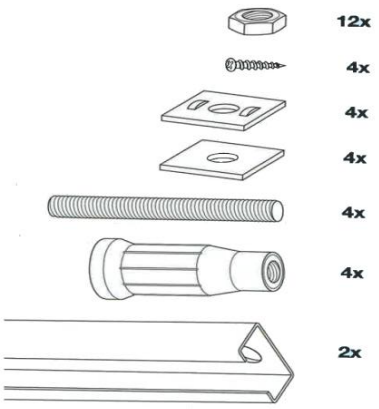

2) Take out the feet. Then check for the items to be complete.

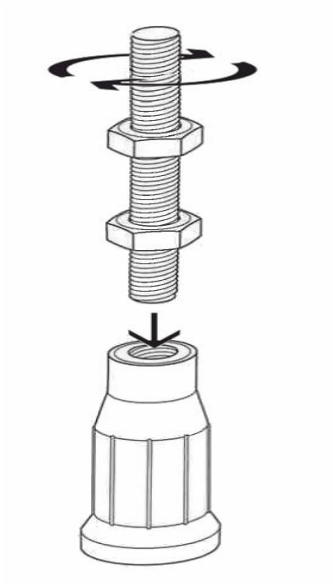

3) Then screw in the threaded pin, the foot and two nuts into each other (see picture):

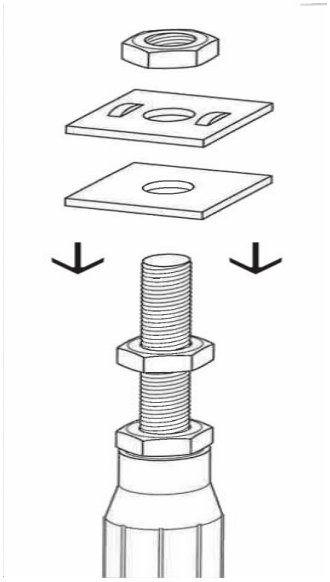

4) In the following step you mount the steel discs and another nut as follows:

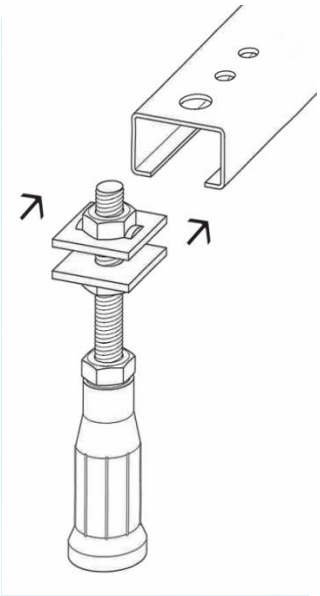

5) Insert the foot into the rail. Note that one steel plate remains inside and one outside the track.

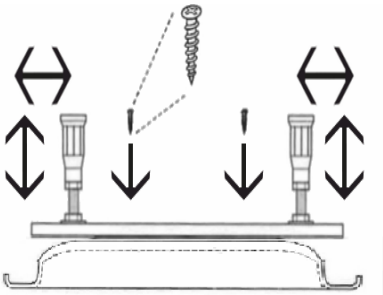

6) Fix the rail at the bottom of the bathtub using the included self-tapping screws.

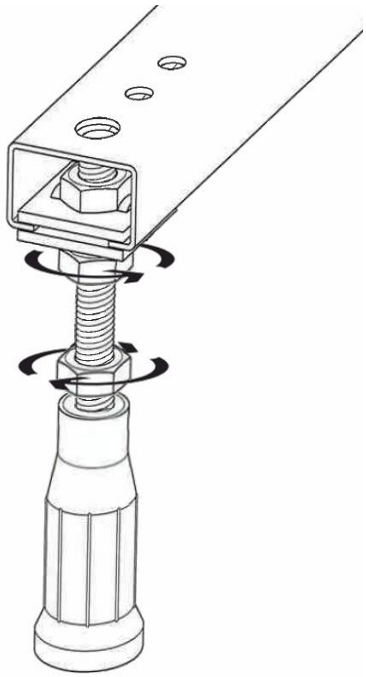

7) Tighten the nuts as shown in the image to fix the feet:

8) Then you can put the bathtub on its feet.

INSTALLATION OF THE SOUND INSULATION TAPE

Bring on the sound insulation tape to the sides of the product facing the wall as shown on the image.

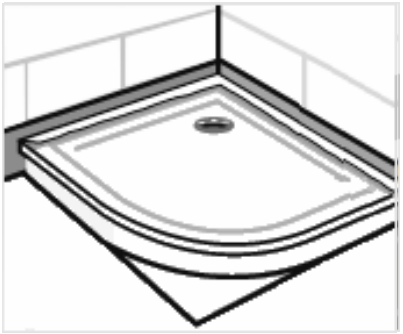

MOUNT THE BATHTUBS ARMATURE POINTS OR -BARS

Armature installation:

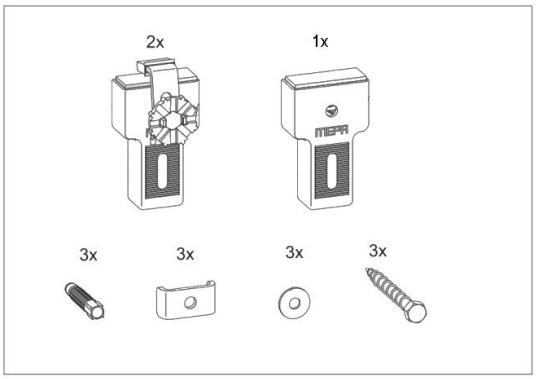

1) Check for the items to be complete.

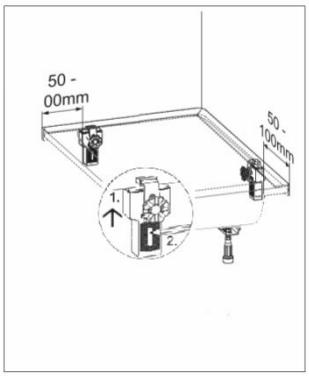

2) Position the armature, depending on shower tray type, 50-100mm from the tray corner, on the wall. Mark the drill holes on the wall as well.

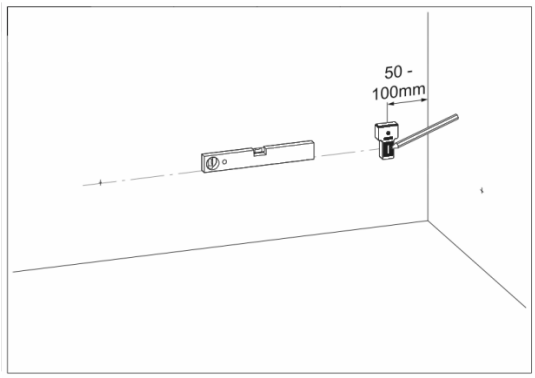

3) Arrange more shower tray armatures as follows.

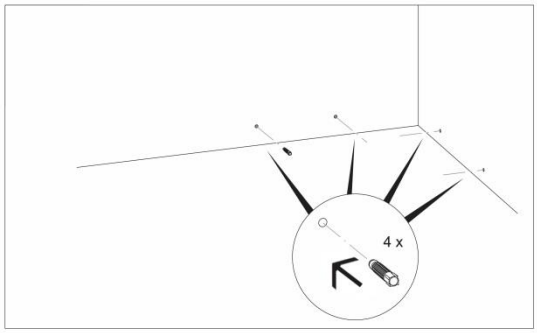

4) After drilling the holes, install the plugs.

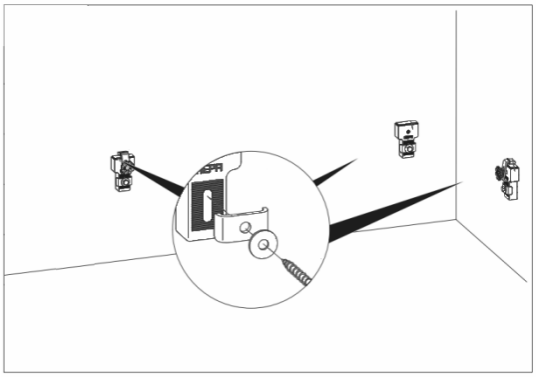

5) Now, the armatures can be screwed in to the wall.

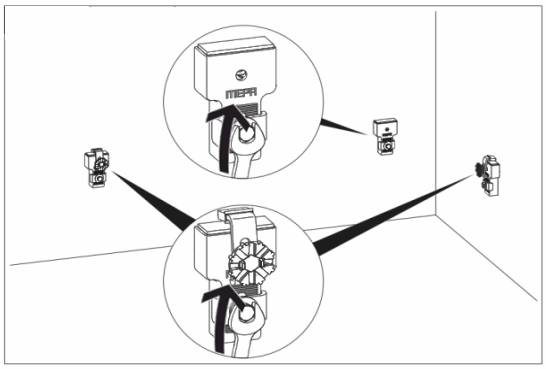

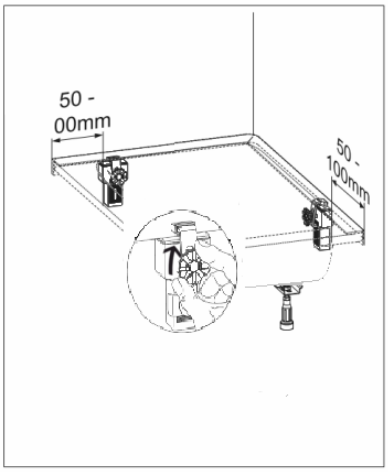

6) Tighten up the armature.

Rail Installation:

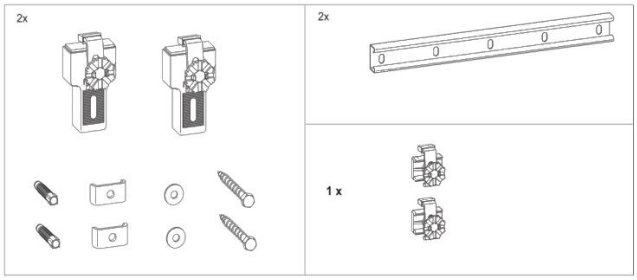

1) Check for the items to be complete.

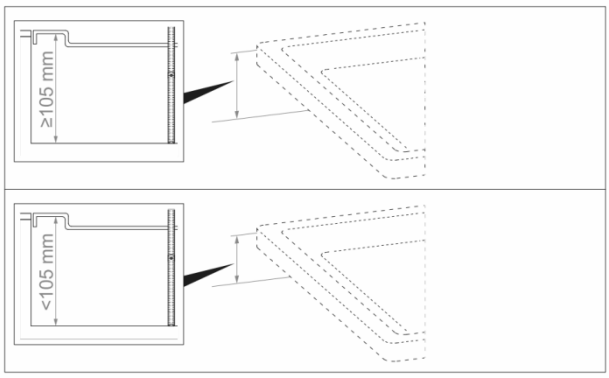

2) Variant 1: Steps 1 – 8

Variant 2: Steps 9 - 13

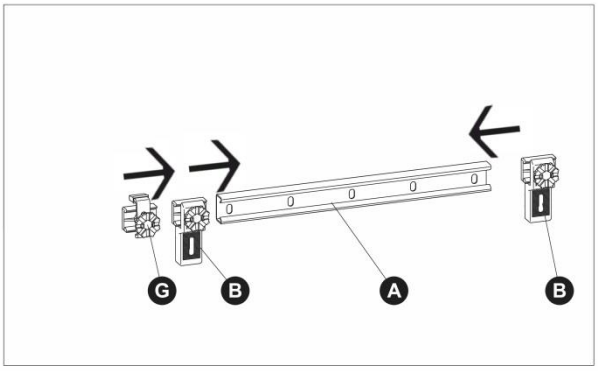

3) Mount the components shown on the rail.

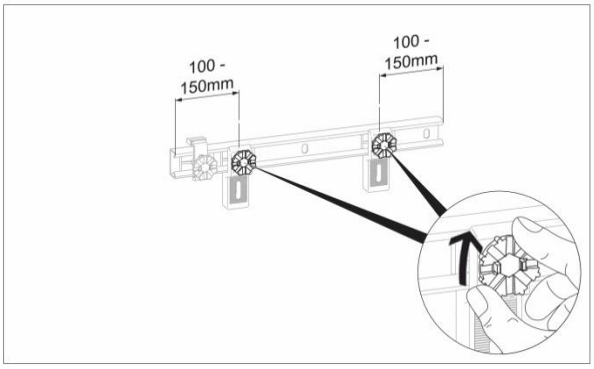

4) Fix items B and H on the rail:

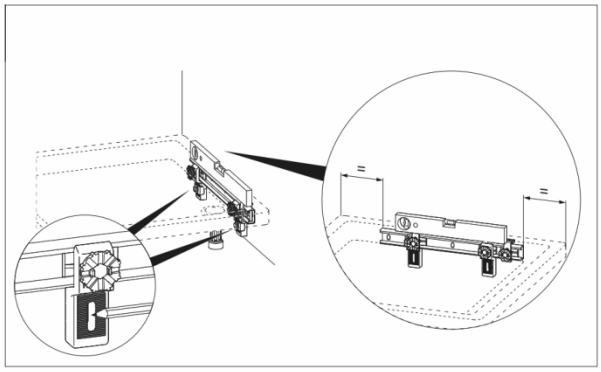

5) Mark the drill holes on the wall.
Also check the horizontal.

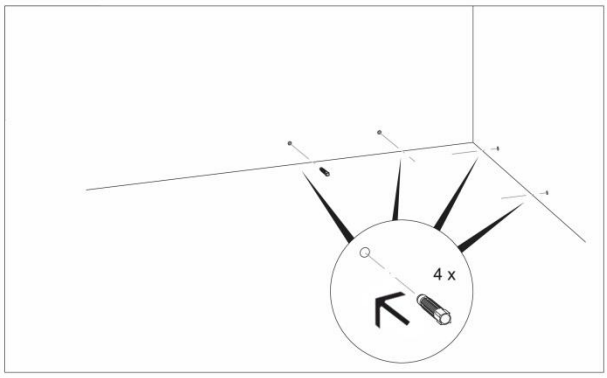

6) After drilling the holes, install the plugs.

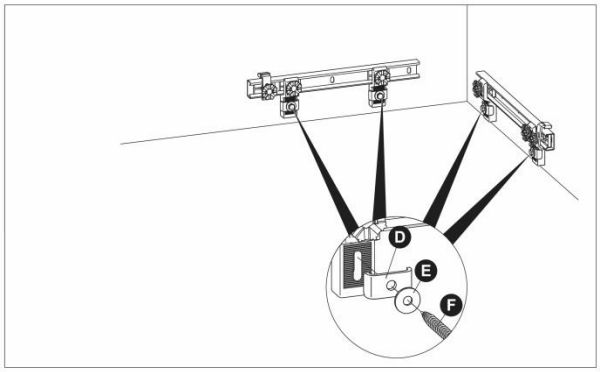

7) Now the rails can be screwed on the wall.

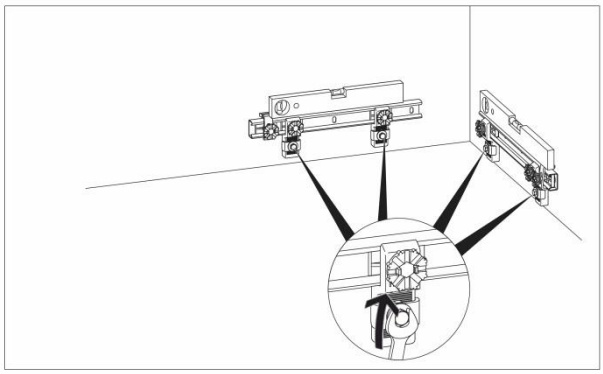

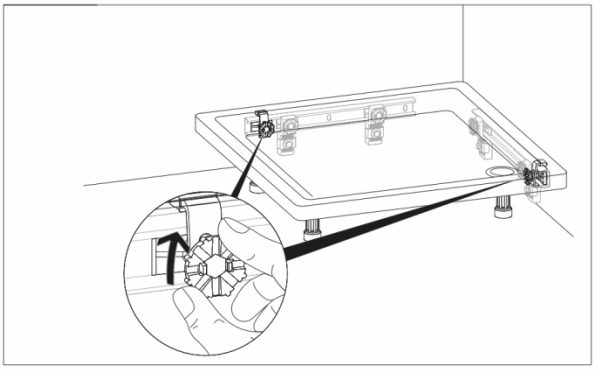

8) Tighten up the armatures.

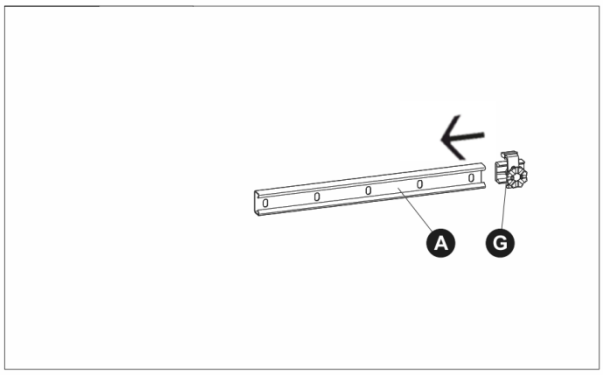

9) Bring on the displayed items on the rail.

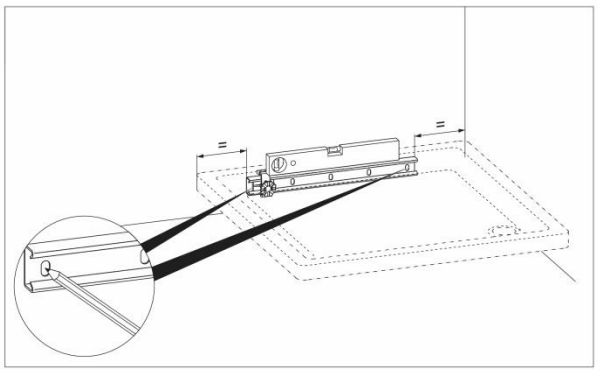

10) Mark the drill holes and check the horizontals.

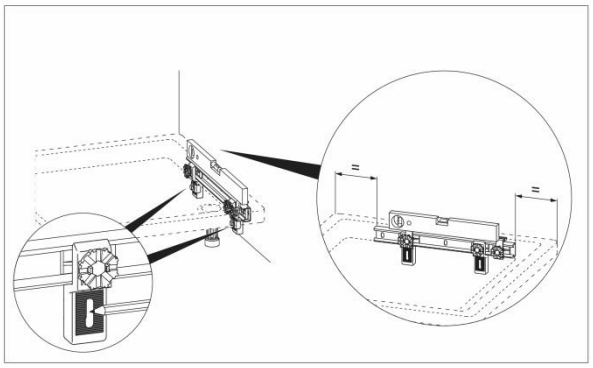

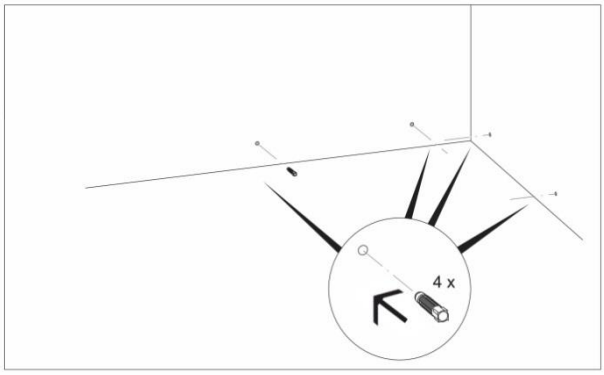

11) After drilling the holes, install the plugs.

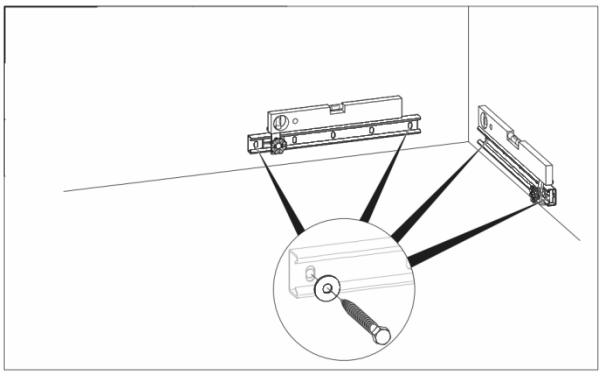

12) Now the rails can be screwed on the wall.

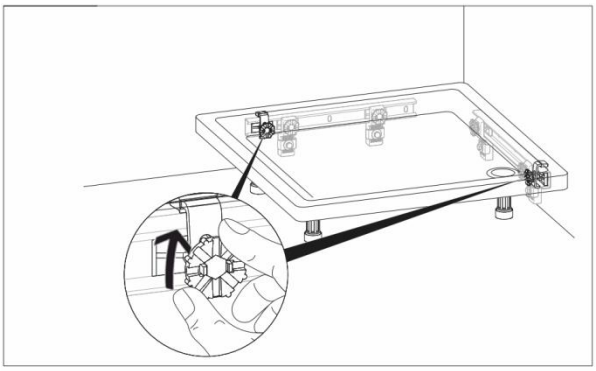

13) Tighten up the armatures.

INSTALLATION OF DRAIN AND OVERFLOW (Example: Viega Tempoplex):

1) Check for the items **to be complete**:

1 cover
2 dip tube
3 mounting flange with screws
4 seal
5 trap

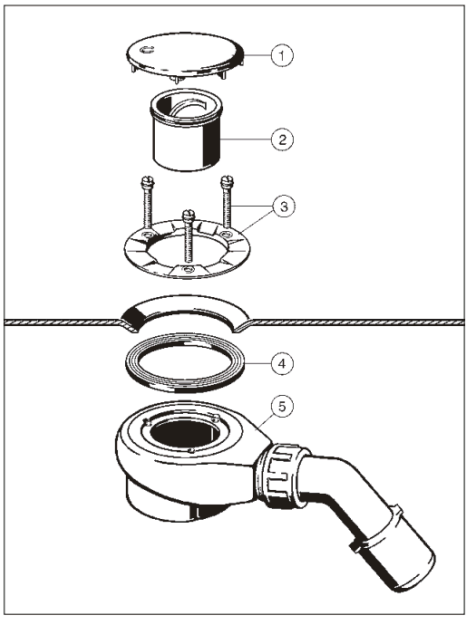

Picture of the items

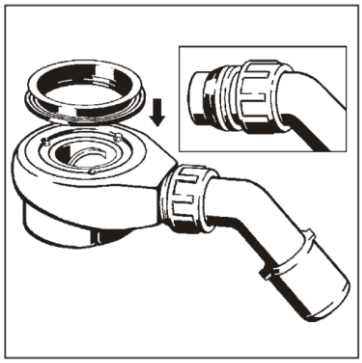

2) Place the double seal on the sealing surface and press it into the retaining.

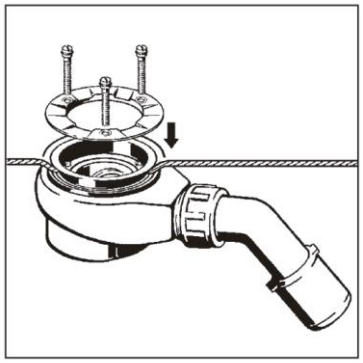

3) Position the drain body with the seal underneath the shower tray. Then lead the top of the dual seal through the drain hole.

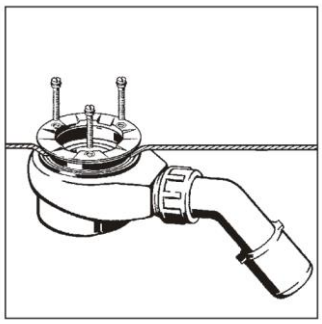

4) Screw in the mounting screws by hand.

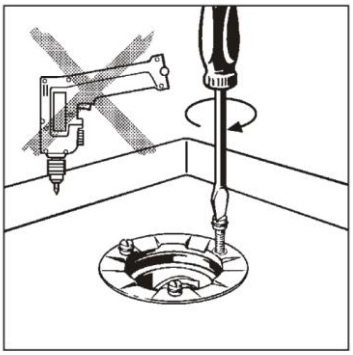

5) Tighten the screws evenly. Please do not use a cordless screwdriver.

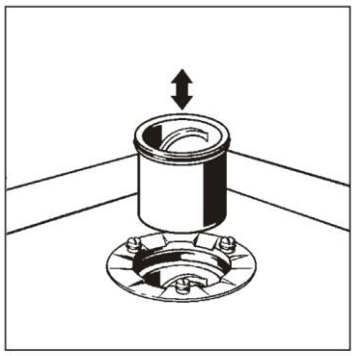

6) Insert the dip tube into the trap.

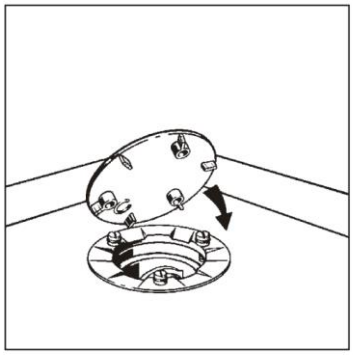

7) Press the cover onto the three mounting points.

YOUR PRODUCT IS NOW READY FOR USE!

CARE INSTRUCTIONS

Bathtubs and shower trays made from acrylic are easy to maintain, because they are non-porous. For cleaning everyday dirt a liquid detergent and cleaning agent (non-scouring) are sufficient. Be sure to use a sponge or soft cloth and rinse afterwards. If water conditions because a slight lime scale, this can be easily solved with household vinegar. Please do not use a descaler for hot water appliances (risk of surface discoloration). Slight damage or scratches can be fixed quickly with an acrylic care set (commercially available).

WARRANTY

For perfect and professional processing of this product, we assume, in accordance with our sales and delivery, a warranty for a period of 5 years. For whirlpool and air pool technique applies a period of 2 years. Excluded are damages which are caused by improper handling, installation, and use of force. The warranty begins on the day of payment on the appropriate product.

Dear customer,

We thank you that you have chosen a product of the GALATEA GmbH. In order to serve you even better in the future, we need your opinion about us and our products. If you have questions we would like to help you.

Service phone: 0049 – (0) 3574 853 - 0

OUR CUSTOMER SERVICE WILL GLADLY HELP YOU WITH YOUR QUESTIONS!

CUSTOMER SERVICE
Phone: 0049 – (0) 3574 853-100
E-Mail: a.heyn@galatea-bad.de

YOU’RE GALATEA-TEAM